Electric Vehicle DR Compliance

Client	Intelligent Automation
Document Status	Submission
Document Revision	V1.0
Date	9th April, 2021

intelligentautomation

Gswitch

Table of Contents

1 About Intelligent Automation

Intelligent Automation Pty Ltd (IA) was established in 2010 as an Electrical Contracting Company on the Sunshine Coast, responding to a market gap in Home Automation Solutions. The company quickly identified other opportunities in appliance management for energy reduction and the renewable industry. This opportunity encouraged IA into manufacturing its own product. The Gswitch was developed over a 6-year span and has captured the attention of the Australian Energy Market Operator (AEMO) and Energex.

IA has successfully completed a trial for Demand Response (4755.3.5 compliance) and is also now currently in pilot phase with Energy Queensland.

The Gswitch is the first Home Energy Management System (HEMS) to receive 4755.3.5 Demand Response compliance in Australia. We have seen great interest in our technologies and we continue to innovate in this sector. Other accolades and highlights of our product includes:

- Winner “Sunshine Coast Clean Tech Small Business Award” 2018
- Demand Response 4755.3.5 compliance attained 2019
- Industry partner with Energex for IPDRS (V7) trial 2020 (28 sites)
- Intelligent Automation has contributed to industry working groups including:
  - AEMO VPP,
  - 4755.2 standard
  - BTM code of practice

2 HEMS Demand Response (DR) compliance

Intelligent Automation has achieved DR compliance with EV one directional chargers. This compliance is obtained when the EV charger is connected to the Gswitch which itself is 4755.1 DRED compliant. By connecting the Gswitch to the charger, we effectively make it 4755.1 compliant whilst connected to the Gswitch.

Under this standard an 8 channel DRED can be connected to the Gswitch to achieve DRMs 0 to 8.

Intelligent Automation understands there is no current standard for 4755 DR compliance for a HEMS, however, the complexity of by-directional power in the Energex 2019 HEMS trial, concluded that the existing 4755.3.5 Standard was appropriate for this product. The standard stipulates that a DRC (Demand Response Controller) can be used for sending DR signals to an appliance either as a direct connection or via a communication protocol.

The specifics of the DRC and its associated functions as outlined within the standard are a clear sub-set of a HEMS product, thus we feel that any HEMS device compliant to 4755.3.5 should be considered as a DRC.

This is also illustrated in the 4755.3.5 documentation as shown below (emphasis ours)

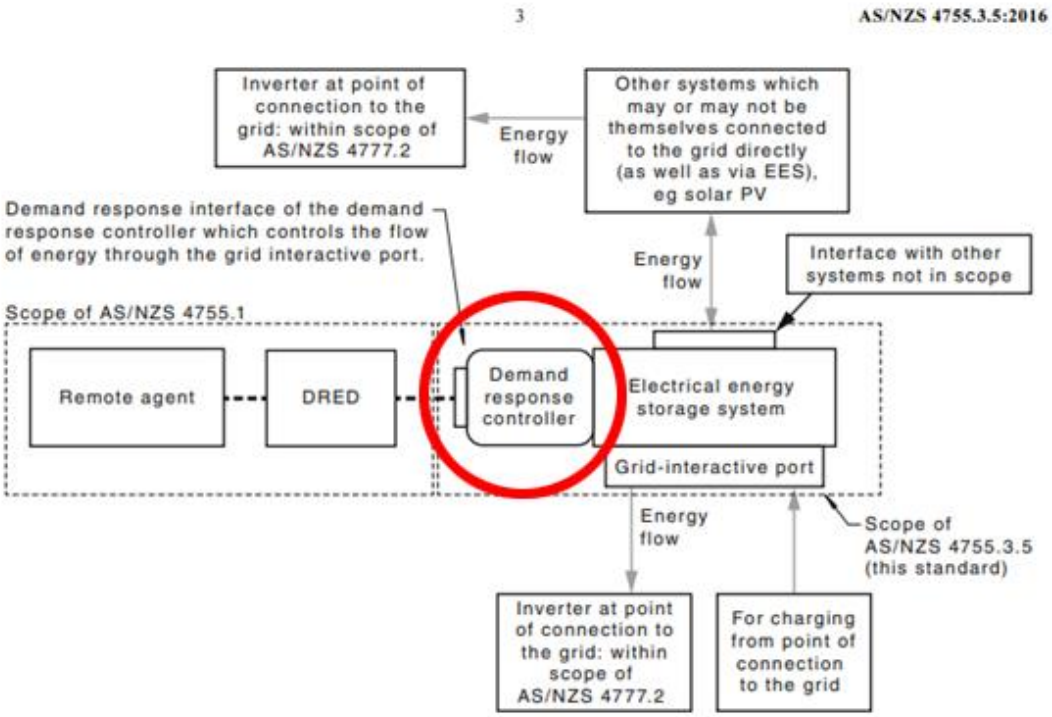
3
AS/NZS 4755.3.5:2016
Inverter at point of connection to the grid: within scope of AS/NZS 4777.2
Energy flow
Other systems which may or may not be themselves connected to the grid directly (as well as via EES), eg solar PV
Demand response interface of the demand response controller which controls the flow of energy through the grid interactive port.
Energy flow
Interface with other systems not in scope
Scope of AS/NZS 4755.1
Remote agent
DRED
Demand response controller
Electrical energy storage system
Grid-interactive port
Energy flow
Scope of AS/NZS 4755.3.5 (this standard)
Inverter at point of connection to the grid: within scope of AS/NZS 4777.2
For charging from point of connection to the grid

Figure 1

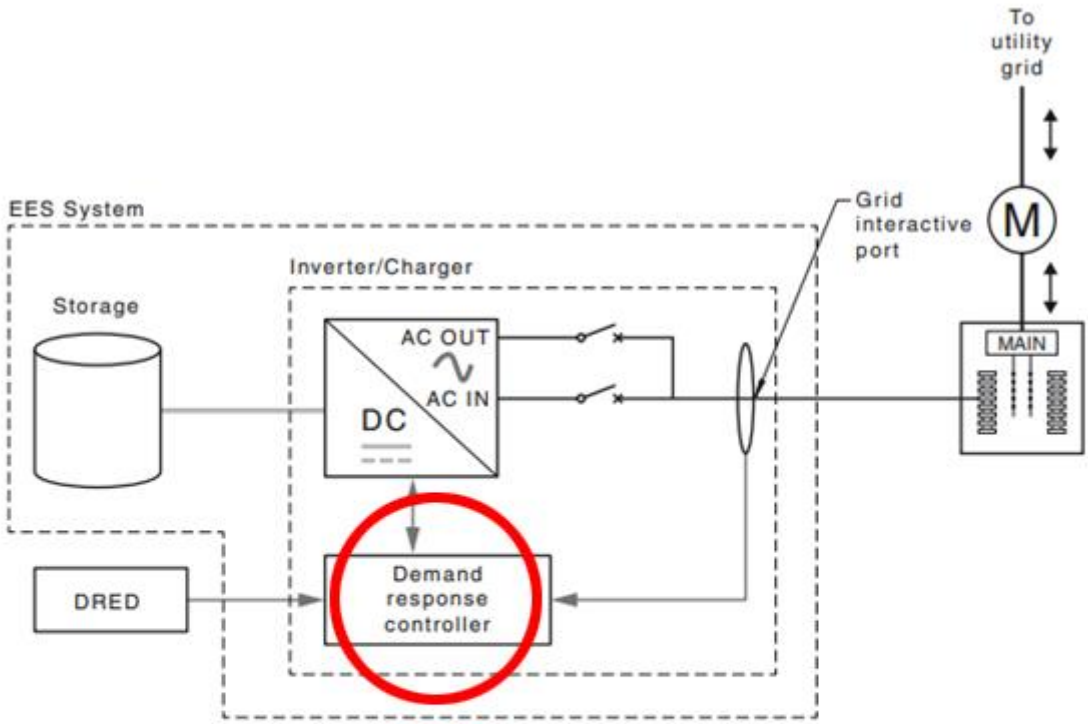

Description:

1 The EES system is connected to the grid via the grid interactive port (GIP).

2 The demand response controller (DRC) of the EES system is part of an inverter/charger. The DRC interprets the operational instructions from the DRED and controls energy flows though GIP by managing the inverter/charger functions.

3 The EES system can import from and export to the grid.

Figure 2

The above figures consider the DRC to be part of the appliance, the same can be said for when a Gswitch is similarly connected to the appliance, effectively “converting” the appliance to be 4755.x compliant (compliance levels will be based on the appliance being controlled).

3 Gswitch Architecture

The Gswitch is part of the Intelligent Automation Power Platform. This is comprised of a suite of modules designed to provide advanced HEM functions to connected households or industry but to also provide mechanisms for grid integrity and energy markets such as VPP and FCAS capabilities.

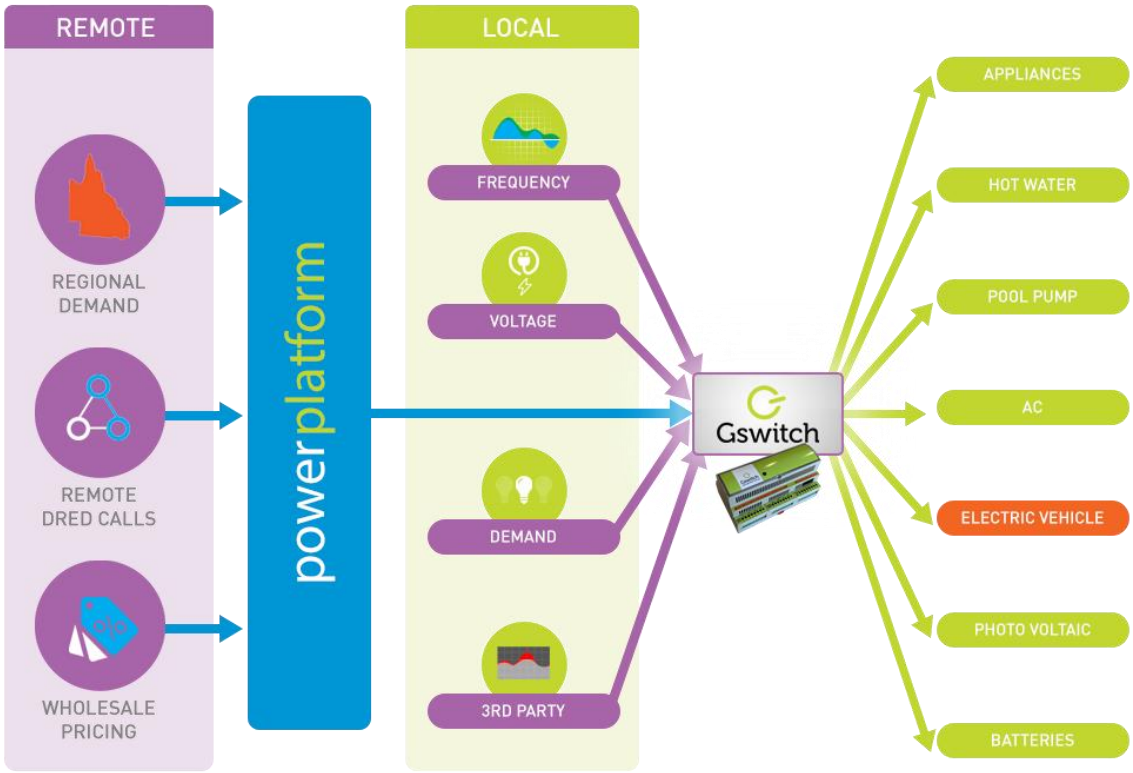

As can be seen from the above illustration, the Power Platform can accept input data from multiple sources and be able to process this into directives for the many products that can be connected to the Gswitch.

3.1 Remote Data Sources

These can include any data that is readily accessible by our B2B interface. We currently import sources for the following:

- Wholesale Pricing
  - Capture spot price data from the AEMO in order to provide customers (who are on wholesale pricing contracts) with the best power utilisation when considering costs
- Regional Demand
  - Used to project expected pricing and demand loads throughout the day. This data is used to help schedule appliances to be utilised during periods of low cost of low loads on the network
- Remote DRED Calls
  - Enables remote agents to send DR directives to connected appliances. We currently employ 2 methods of receiving DRED calls:
    - Direct signals from DRED devices from Energex (or similar devices), these are sent directly to the device for action
    - API based calls, utilising the Power Platform APIs. This is being utilised by Energex IPDRS trials which are currently in-progress (2021). The API is based upon 4755.3.5 with extensions to address gaps that are in the current standard.

The Power Platform has been designed with connectivity in mind, we realise that this is an emerging market (for distributed consumer-grade loads) and have thus built-in extensibility to our architecture to ensure we can address shifting pathways that may arise in the future.

3.2 Local Data Sources

Whilst the Gswitch can receive many of its inputs from our Power Platform, it also has built-in capabilities to function as a stand-alone unit, not requiring the internet to function.

For such functionality, the Gswitch relies on local data sources to perform load shaping functions for the household:

- Frequency
  - Measures household frequency and can react to high variances by adjusting loads to keep this in-line with requirements.
- Voltage
  - Similar to frequency measurements, voltage is measured and loads are shaped to keep this in-line with requirements. This is especially important for households with PV inverters that are designed to shut-down when voltage exceeds a threshold. The Gswitch can avoid this (or delay it) by activating loads to keep the voltage under control, thus negating the need to shut down the inverter. Not only does this increase the lifespan of the PV appliance, it also increases the customers value in the appliance
- Demand
  - Monitors household demand and shapes appliances to optimise utilisation. This includes functions such as solar soaking which maximises the utilisation of an installed PV array.
- 3rd Party
  - We work with other companies to develop modules that can also contribute to the load shaping capabilities of the device. This includes working with hot water, pool pump and battery manufacturers to obtain direct control of their appliance (either by serial or RS485) to provide load shaping capabilities to their device.

4 DRC controllers

As in fig 1 and 2 the DRC plays a large part in controlling by-directional current flow for 4755.2 and 47551. It also completes the connection via our Power Platform to an aggregator or remote agent. The Gswitch architecture shows how all house-hold appliances can connect and be DR compliant without individual DRED modules needing to be incorporated into each appliance. The perception of this concept is that the house is one appliance and all loads are manipulated to achieve 4755.3.5 compliance.

This is illustrated below, where the HEMS is actually controlling 3 EPs (Electrical Product) but from the perspective of the remote agent, the house is effectively a single EP with the aggregated load of all controlled loads within the household.

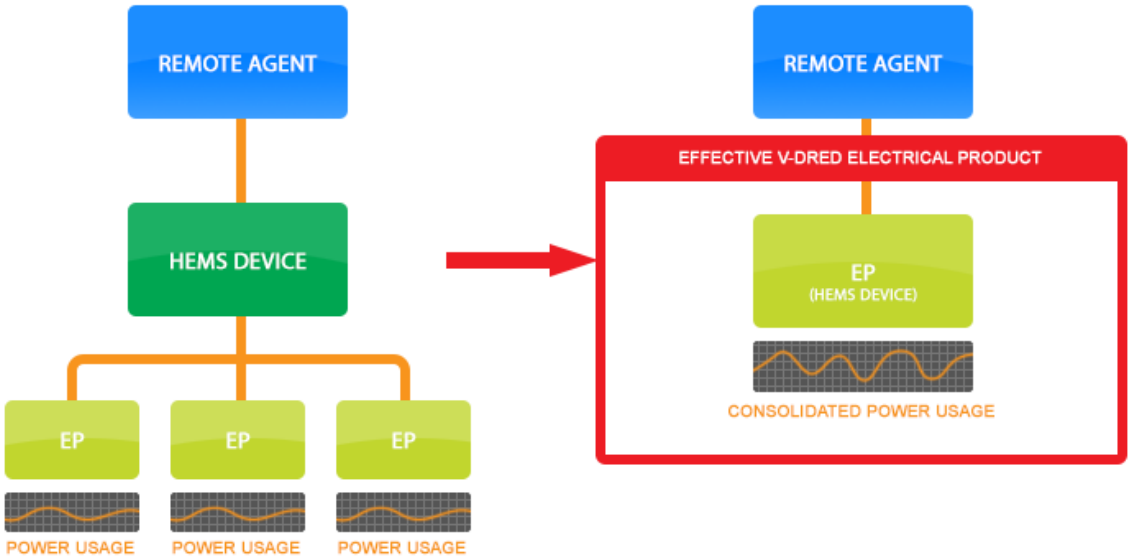

5 Areas of Concern

5.1 Controlling Large Loads

When DR signals are sent by multiple remote agents to individual appliances in the same household and there is no consideration for load management or power monitoring at a switchboard level.

This could overload the consumer' mains cables and in some cases jeopardise the integrity of the cable. Nuisance circuit breaker tripping being one of the problems.

While this has not been an issue for distribution companies as the load switching sizes are relatively low and generally confined to hot waters and pool pumps. With the ability for control of EV chargers, large air conditioners and batteries added to the scenario this control could easily cause an issue. Coordination of larger loads has to be a consideration and will also protect the consumer against large distribution demand charges.

Example: .DR is called for an increase in consumption. One or Multiple aggregators send signals to increase load, hot water, pool pump, air conditioner load increases, batteries charge and the EV car starts to charge. This will overload the consumers mains. When knowing the spare capacity of the consumers mains only then should a DR be called.

5.2 Multiple Remote Agents

This has been an on-going concern (whilst part of the 4755.3.5 WG) which has not been appropriately addressed.

Whilst multiple remote agents can create complexity, if managed correctly it can open up capabilities for capable devices that create new markets.

The core issue to address with multiple remote agents is to remove conflicting directives, this can be achieved by considering the following:

1. Develop a priority mechanism, controlled by the customer. The customer will deem the appropriate control they wish to execute by virtue of contracts they have signed with each remote agent

2. Ensure that all remote agents are reacting to the same DRM call (for network integrity purposes). This means that all RA's should have the capability to know of any DRM calls for their "connected" devices and ensure the instructions they send to each device conforms with what is required to satisfy they DRM call.
    a. This also requires that RAs should go through an accreditation process where they can prove their load shaping instructions produce the intended outcome according to each DRM that is sent.
    b. If all RAs are working towards achieving the same outcome for a given DR call, then this should remove any contentious actions amongst connected devices.

6 4755.1 as a Base Standard

This is a low-level control using relay inputs. This system is very effective for ease of connecting remote agents. This can become a plug a play with the simplicity of the appliances to use a HEMS or connect to an individual appliance DRED. This offers diversity of communication signalling and does not fix the appliance to the one system, as the life span of appliances can be over 15-20 years.

This scenario is extremely effective for “low complexity” devices such as hot water systems – allowing the manufacturer to keep costs of production low (they only need to implement the load shaping capabilities and skip any communication and calculation functions) and also allow consumers to select the best HEMS appropriate for them.

7 Conclusion

Intelligent Automation believes there is a missing piece of the puzzle to moving forward for DR compliance in HW, PP, AC and EV chargers.

These are the following points brought forward.

- The added cost and complexity in appliance manufacturing.
- Limited compliance of household appliances which could lead to reduced consumer choice.
- The ability for manufactures to integrate DRED compliance to their product.
- Giving appliance manufactures the choice to use a DRC.
- HEMS customers would avoid the cost of purchasing a new DRED appliance.
- HEMS would offer a gateway communication for ease of network connection.
- HEMS offer 1 communication gateway to multiple appliances.
- Consumer choice to purchase cheaper appliances and add a DRC.
- When markets are available, consumers can install DRC’s when there is value in doing so.
- A market needs to be established for consumer pull though to follow.
- Risk of consumer having large demand charges
- fixed communication protocol using 4755.2 over the life span of the appliance.
- Any appliances not limited to the 4 mentioned can be DR responsive on a HEMS
- Duplication of the DR feature and cost if connected to a HEMS